FEMALE END VIEW	MALE END VIEW	WIRING DIAGRAM

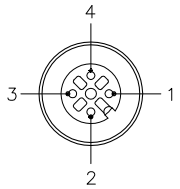

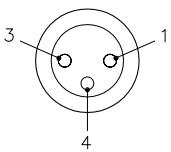

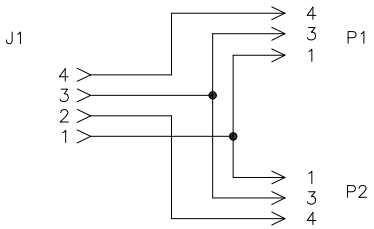

SPECIFICATIONS

CONTACT CARRIER MATERIAL/COLOR	NYLON OR TPU/YELLOW (J1), BLACK (P1,P2)
MOLDED HEAD MATERIAL/COLOR	TPU/YELLOW
CONTACT MATERIAL/PLATING	BRASS/GOLD
COUPLING NUT MATERIAL/FINISH	STAINLESS STEEL/PASSIVATED (J1)
RATED CURRENT [A]	4.0 A
RATED VOLTAGE [V]	125 V
OUTER CABLE JACKET MATERIAL/COLOR	PVC/YELLOW
CONDUCTOR INSULATION MATERIAL	PVC
NUMBER OF CONDUCTORS [AWG]	3x24 AWG
TEMPERATURE RANGE	−40°C to +105°C (−40°F to +221°F)
PROTECTION CLASS	MEETS NEMA 1,3,4,6P AND IEC IP67

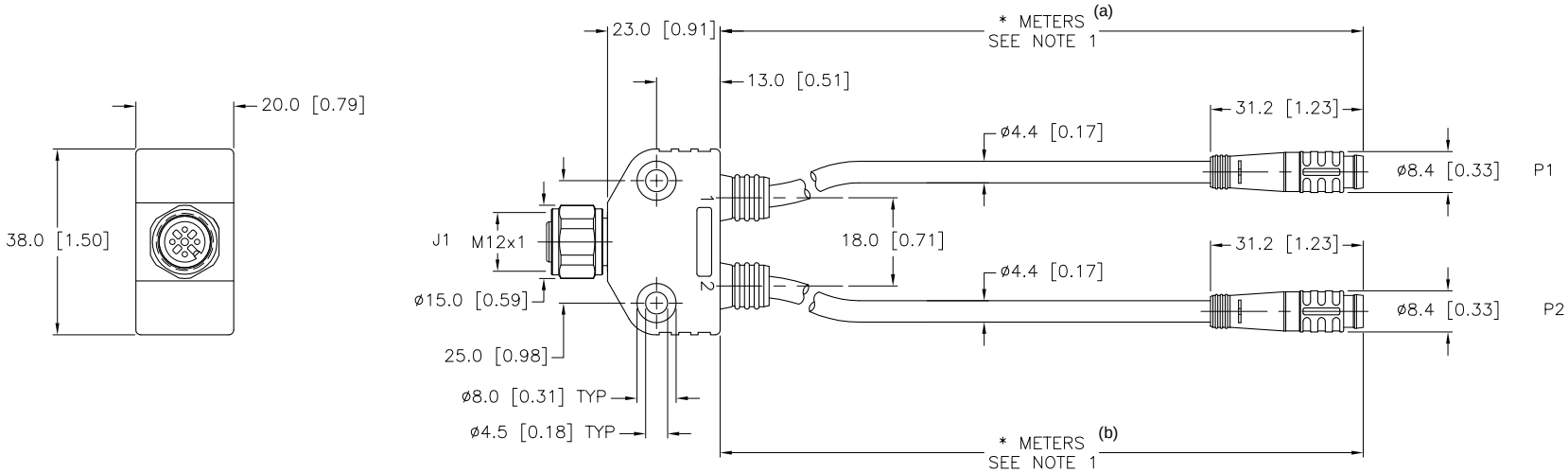

CABLE LENGTH	TOLERANCE
ALL LENGTHS	+ 4% (OR 50mm) OF LENGTH − 0% (OR 0mm) OF LENGTH WHICHEVER IS GREATER
STRIP LENGTH	**TOLERANCE**
0–7mm	±0.5mm
8–29mm	±1.0mm
30–49mm	±2.0mm
50–69mm	±3.0mm
70–100mm	±4.0mm
OVER 100mm	±5.0mm

SOURCE DRAWING - FOR REFERENCE ONLY

NOTES:

1. "*" INDICATES CABLE LENGTH IN METERS. CONTACT TURCK TO ORDER SPECIFIC LENGTHS.

REV	DESCRIPTION	BY	DATE	ECO NO.
D	UPDATE NUT ON TRUNK TO BE A HEX NUT	RDS	08/24/11	36239

RELATED DOCUMENTS
1.
2.
3.
4.

3RD ANGLE PROJECTION

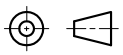

THIS DRAWING IS CONFIDENTIAL AND THE PROPERTY OF TURCK INC. USE OF THIS DOCUMENT WITHOUT WRITTEN PERMISSION IS PROHIBITED.

TURCK INC
High Technology Sensors and Automation Controls
3000 CAMPUS DRIVE
MINNEAPOLIS, MN 55441
1-800-544-7769
(763) 553-7300
(763) 553-0708 fax
turck.com

MATERIAL: SEE SPECIFICATIONS

FINISH: SEE SPECIFICATIONS

ALL DIMENSIONS DISPLAYED ON THIS DRAWING ARE FOR REFERENCE ONLY
0 TO 6 = ±0.1
6 TO 30 = ±0.3
30 TO 200 = ±0.5
OVER 200 ±0.4
CONTACT TURCK FOR MORE INFORMATION
ALL DIMENSIONS ARE REFERENCE ONLY

DRFT: RWC
DATE: 03/23/09
DSGN:
SCALE: 1=1.5

UNIT OF MEASUREMENT
MILLIMETERS [INCH]
DO NOT SCALE THIS DRAWING

DESCRIPTION: VB2-FKMV 4.4/2PSG 3-*/*
(a) (b)

IDENTIFICATION NO.:

REV: D

FILE: 777024180

SHEET 1 OF 1